Dimensions of PN 63 Flanges DIN EN 1092-1

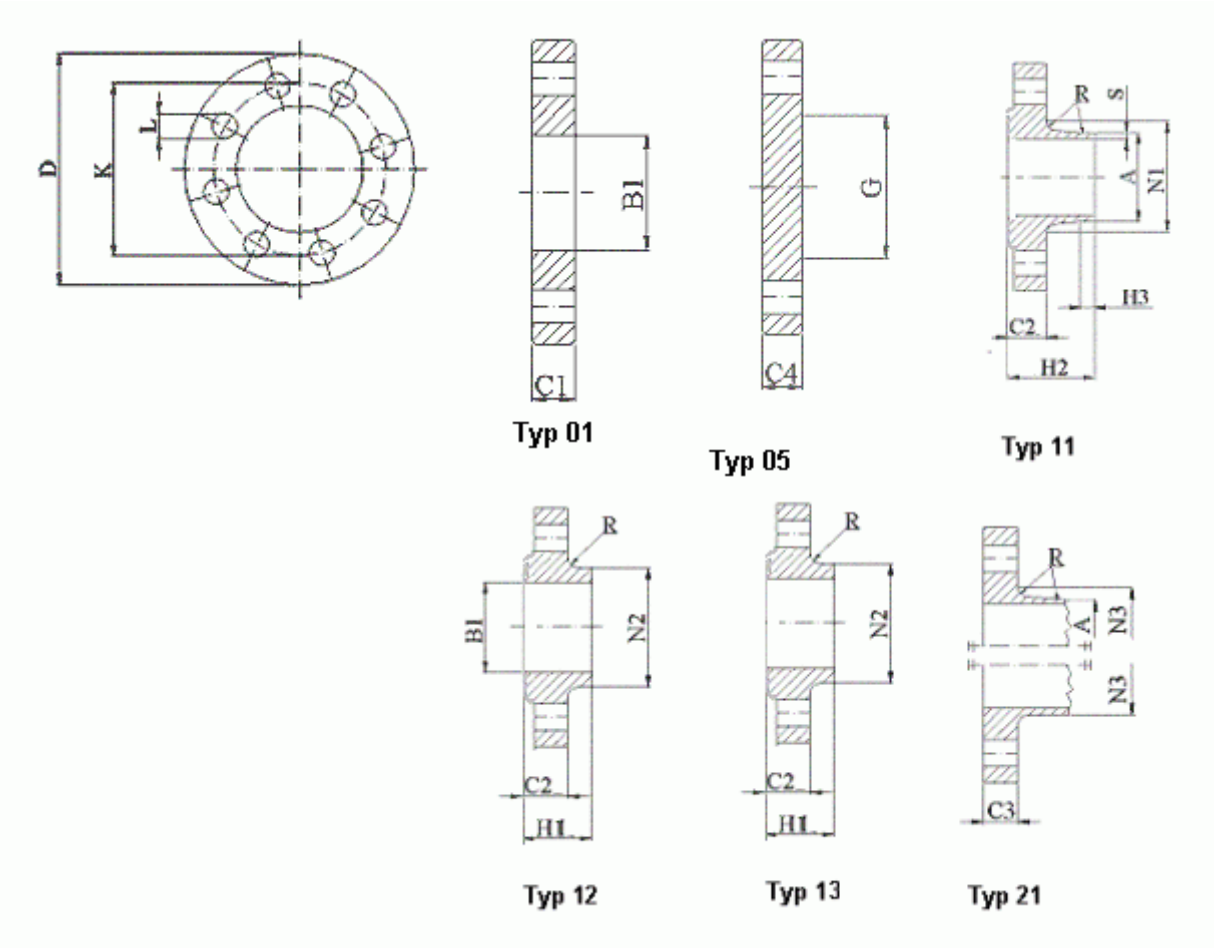

NOTE 1: Dimensions N1, N2 and N3 are measured at the intersection of the hub draft angle and the back face of the flange.

NOTE 2: For d1 dimensions see document "Flange facing according to DIN EN 1092-1".

Dimensions in mm

Nominal diametar DN	Mating dimensions					Outside diameter of neck	Bore diameters			Flange thickness				Chamfer	Collar thickness	Diameter of shoulders	Length			Neck diameters			Corner radius	Neck thickness (preferred vallue)
	Outside diameter	Diameter of bolt circle	Diameter of bolt hole	Bolting																				
	D	K	L	No	Size	A	B1	B2	B3	C1	C2	C3	C4	E	F	G max	H1	H2	H3	N1	N2	N3	R	S
	Flange Type																							
	01, 05, 11, 12, 13, 21					11 21*	01 12	-	-	01	11 12 13	21	05	-	-	05	12 13	11	11	11	12 13	21	11 12 13 21	11
10 15 20 25 32 40	Use PN 100 dimensions																							
50	180	135	22	4	M20	60,3	61,5	-	-	26	26	26	26	-	-	-	36	62	10	82	90	90	6	2,9
65	205	160	22	8	M20	76,1	77,5	-	-	26	26	26	26	-	-	45	40	68	12	98	112	105	6	3,2
80	215	170	22	8	M20	88,9	90,5	-	-	30	28	28	28	-	-	60	44	72	12	112	125	122	8	3,6
100	250	200	26	8	M24	114,3	116,0	-	-	32	30	30	30	-	-	80	52	78	12	138	152	146	8	4,0
125	295	240	30	8	M27	139,7	141,5	-	-	34	34	34	34	-	-	105	56	88	12	168	185	177	8	4,5
150	345	280	33	8	M30	168,3	170,5	-	-	36	36	36	36	-	-	130	60	95	12	202	215	204	10	5,6
200	415	345	36	12	M33	219,1	221,5	-	-	46	42	42	42	-	-	180	-	110	16	256	-	264	10	7,1
250	470	400	36	12	M33	273,0	276,5	-	-	54	46	46	46	-	-	220	-	125	18	316	-	320	12	8,8
300	530	460	36	16	M33	323,9	327,5	-	-	62	52	52	52	-	-	270	-	140	18	372	-	378	12	11,0
350	600	525	39	16	M36	355,6	359,5	-	-	72	56	56	56	-	-	310	-	150	20	420	-	434	12	12,5
400	670	585	42	16	M39	406,4	411,0	-	-	78	60	60	60	-	-	360	-	160	20	475	-	490	12	14,2
500	800	705	48	20	M45	-	-	-	-	-	-	68	-	-	-	-	-	-	-	-	-	602	12	-
600	930	820	56	20	M52	-	-	-	-	-	-	76	-	-	-	-	-	-	-	-	-	714	15	-
700	1045	935	56	24	M52	-	-	-	-	-	-	84	-	-	-	-	-	-	-	-	-	826	15	-
800	1165	1050	62	24	M56	-	-	-	-	-	-	92	-	-	-	-	-	-	-	-	-	938	18	-
900	1285	1170	62	28	M56	-	-	-	-	-	-	98	-	-	-	-	-	-	-	-	-	1048	18	-
1000	1415	1290	70	28	M64	-	-	-	-	-	-	108	-	-	-	-	-	-	-	-	-	1162	18	-
1200	1665	1530	78	32	M72	-	-	-	-	-	-	126	-	-	-	-	-	-	-	-	-	1390	18	-

***** For flanges type 21 the outside hub diameter approximately corresponds to the outside pipe diameter.

NOTE: The p/t ratings from EN 1092-1 apply only for flange types 05, 11, 12, 13 and 21 having nominal sizes up to and including DN 600. The p/t rating of all other flanges shall be agreed between the manufacturer and the purchaser.